LockNLoad Platform

MAXIMUM PRODUCT LOAD RATING:

50 kg (size F)
100 kg (sizes A, B, G, I, K, L)
150 kg (sizes C, D, E, H, J, N, P & U)

IMPORTANT:

- **LOAD = WEIGHT OF PLATFORM or BARS + MOUNTING SYSTEM + ACCESSORIES + CARGO**
- **PLEASE REFER TO VEHICLE MANUFACTURER SPECIFICATIONS FOR MAX ROOF LOAD CAPACITY OF VEHICLE. THE LOWEST LOAD RATING APPLIES.**
- **OFFROAD RATING: SCAN QR CODE FOR LOCKNLOAD LOAD RATING GUIDE. REDUCTIONS MAY APPLY.**

AU/NZ EU

FIRST TIME INSTALLATION

- Please read instructions carefully before installation.
- Check the contents of kit. Contact your YAKIMA dealer if any parts appear missing or damaged.
- Clean your vehicle roof prior to fitting the LockNLoad Platform.
- Use caution when handling Platform Sides, Ends and Slats as sharp edges may be present.
- Images throughout show a 7 Slat Platform, indicative of Platform sizes A and B. Please note other Platforms will have differing amounts of slats and hardware.
- Place these instructions in the vehicle's glove box after installation is complete.

TOOLS REQUIRED:

- 4 mm Allen Key
- 5 mm Allen Key
- Torque Wrench
- 10 mm Socket Wrench or Spanner
- 13 mm Socket Wrench or Spanner

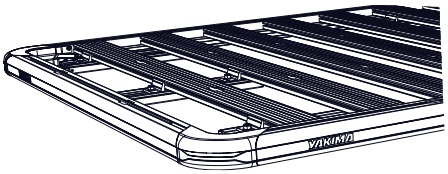

KIT CONTENTS

ITEM	COMPONENT	(8000337) Platform A 1240 x 1530 mm	(8000338) Platform B 1380 x 1530 mm	(8000339) Platform C 1380 x 1930 mm	(8000340) Platform D 1430 x 2130 mm	(8000341) Platform E 1240 x 2130 mm
1.	Platform Side Left & Right	x2	x2	x2	x2	x2
2.	Platform Corner	x4	x4	x4	x4	x4
3.	Slat	x7	x7	x9	x10	x10
4.	M6 Tee Nut	x8	x8	x8	x8	x8
5.	M6 x 25 mm Button Head Cap Screw with Washer	x10	x10	x10	x10	x10
6.	M6 x 16 mm Button Head Cap Screw with Washer	x28	x28	x36	x40	x40
7.	M6 x 20 mm Plastite Cap Screw	x8	x8	x8	x8	x8
8.	M8 Nyloc Nut	x14	x14	x18	x18	x18
9.	M8 Washer	x14	x14	x18	x18	x18
10.	M8 T Bolt	x8	x8	x12	x12	x12
11.	M8 x 25 mm Square T Bolt	x6	x6	x6	x6	x6
12.	Platform Support	x2	x2	x2	x2	x2
13.	Slat Clamp	x14	x14	x18	x18	x18
14.	Pivot Mount	x4	x4	x6	x6	x6
15.	Spare Fasteners Pack	x1	x1	x1	x1	x1
16.	Platform Corner Brace	x4	x4	x4	x4	x4
17.	Platform End Front & Rear	x2	x2	x2	x2	x2
18.	Leg Mounting Bracket	x4	x4	x6	x6	x6
19.	Platform Deflector	x1	x1	x1	x1	x1
20.	M6 Nyloc Nut	x4	x4	x6	x6	x6
21.	M6 Washer	x4	x4	x6	x6	x6
22.	M6 x 86 mm Socket Head Cap Screw	x4	x4	x6	x6	x6
23.	M6 Spacer	x4	x4	x6	x6	x6
24.	6 mm Shouldered Bush	x8	x8	x12	x12	x12

KIT CONTENTS

ITEM	COMPONENT	(8000342) Platform F 1570 x 805 mm	(8000343) Platform G 1570 x 1390 mm	(8000344) Platform H 1570 x 2130 mm	(8000345) Platform I 1650 x 1390 mm	(8000346) Platform J 1650 x 1930 mm
1.	Platform Side Left & Right	x2	x2	x2	x2	x2
2.	Platform Corner	x4	x4	x4	x4	x4
3.	Slat	x3	x6	x10	x6	x9
4.	M6 Tee Nut	x8	x8	x8	x8	x8
5.	M6 x 25 mm Button Head Cap Screw with Washer	x10	x10	x10	x10	x10
6.	M6 x 16 mm Button HeadCap Screw with Washer	x12	x24	x40	x24	x36
7.	M6 x 20 mm Plastite Cap Screw	x8	x8	x8	x8	x8
8.	M8 Nyloc Nut	x12	x14	x18	x14	x18
9.	M8 Washer	x12	x14	x18	x14	x18
10.	M8 T Bolt	x8	x8	x12	x8	x12
11.	M8 x 25 mm Square T Bolt	x4	x6	x6	x6	x6
12.	Platform Support	x1	x2	x2	x2	x2
13.	Slat Clamp	x12	x14	x18	x14	x18
14.	Pivot Mount	x2	x4	x6	x4	x6
15.	Spare Fasteners Pack	x1	x1	x1	x1	x1
16.	Platform Corner Brace	x4	x4	x4	x4	x4
17.	Platform End Front & Rear	x2	x2	x2	x2	x2
18.	Leg Mounting Bracket	x4	x4	x6	x4	x6
19.	Platform Deflector	x1	x1	x1	x1	x1
20.	M6 Nyloc Nut	x4	x4	x6	x4	x6
21.	M6 Washer	x4	x4	x6	x4	x6
22.	M6 x 86 mm Socket Head Cap Screw	x4	x4	x6	x4	x6
23.	M6 Spacer	x4	x4	x6	x4	x6
24.	6 mm Shouldered Bush	x8	x8	x12	x8	x12

ITEM	COMPONENT	(8000347) Platform K 1240 x 1390 mm	(8000348) Platform L 1380 x 1390 mm	(8000373) Platform N 1380 x 2130 mm	(8000375) Platform P 1300 x 1930 mm	(8000380) Platform U 1485 x 2130 mm
1.	Platform Side Left & Right	x2	x2	x2	x2	x2
2.	Platform Corner	x4	x4	x4	x4	x4
3.	Slat	x6	x6	x10	x9	x10
4.	M6 Tee Nut	x8	x8	x8	x8	x8
5.	M6 x 25 mm Button Head Cap Screw with Washer	x10	x10	x10	x10	x10
6.	M6 x 16 mm Button Head Cap Screw with Washer	x24	x24	x40	x36	x40
7.	M6 x 20 mm Plastite Cap Screw	x8	x8	x8	x8	x8
8.	M8 Nyloc Nut	x14	x14	x18	x18	x18
9.	M8 Washer	x14	x14	x18	x18	x18
10.	M8 T Bolt	x8	x8	x12	x12	x12
11.	M8 x 25 mm Square T Bolt	x6	x6	x6	x6	x6
12.	Platform Support	x2	x2	x2	x2	x2
13.	Slat Clamp	x14	x14	x18	x18	x18
14.	Pivot Mount	x4	x4	x6	x6	x6
15.	Spare Fasteners Pack	x1	x1	x1	x1	x1
16.	Platform Corner Brace	x4	x4	x4	x4	x4
17.	Platform End Front & Rear	x2	x2	x2	x2	x2
18.	Leg Mounting Bracket	x4	x4	x6	x6	x6
19.	Platform Deflector	x1	x1	x1	x1	x1
20.	M6 Nyloc Nut	x4	x4	x6	x6	x6
21.	M6 Washer	x4	x4	x6	x6	x6
22.	M6 x 86 mm Socket Head Cap Screw	x4	x4	x6	x6	x6
23.	M6 Spacer	x4	x4	x6	x6	x6
24.	6 mm Shouldered Bush	x8	x8	x12	x12	x12

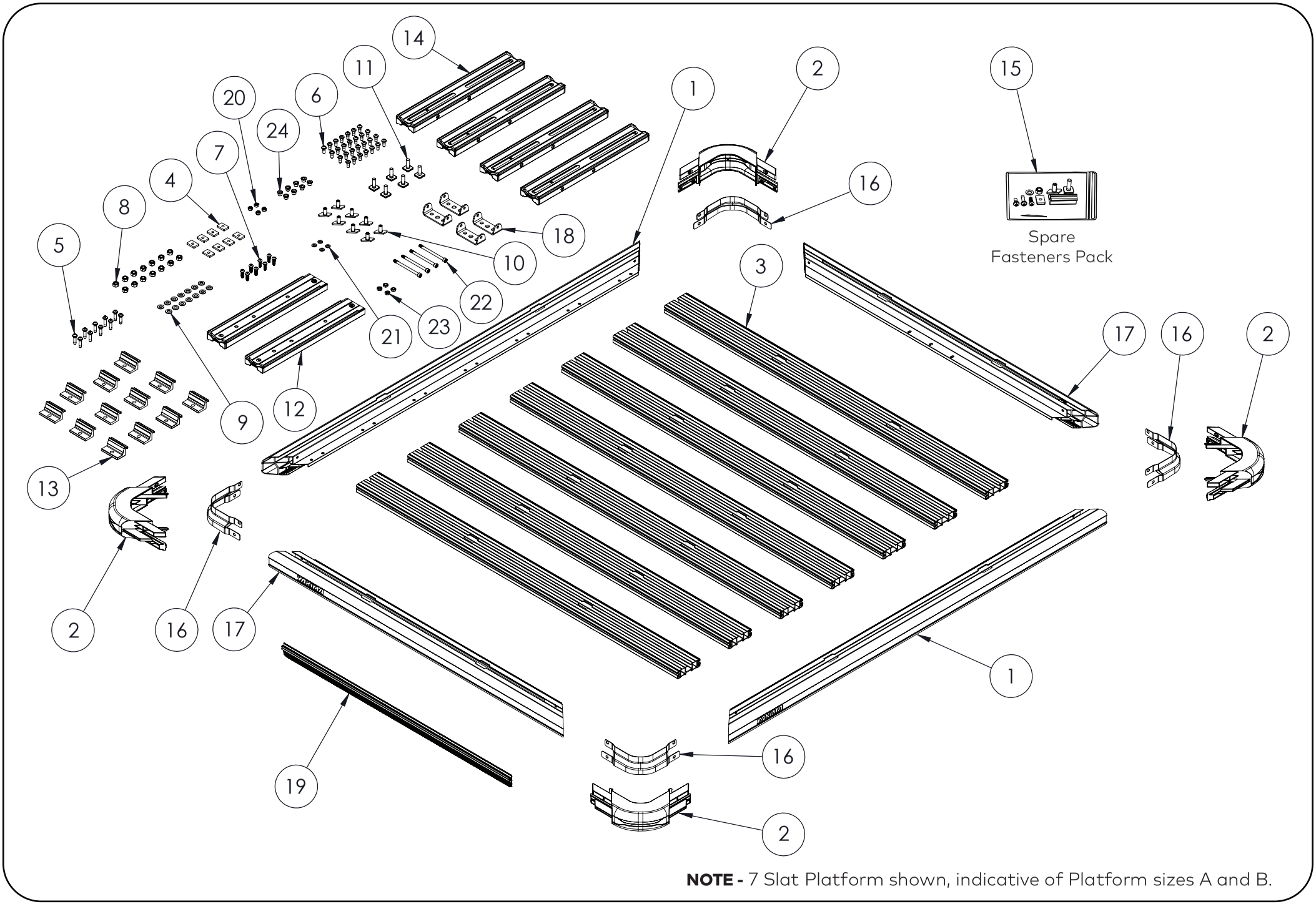

NOTE - 7 Slat Platform shown, indicative of Platform sizes A and B.

PLATFORM ASSEMBLY

1 INSERT NUTS INTO PLATFORM CORNERS.

Insert x2 M6 tee nuts into each corner piece as shown.

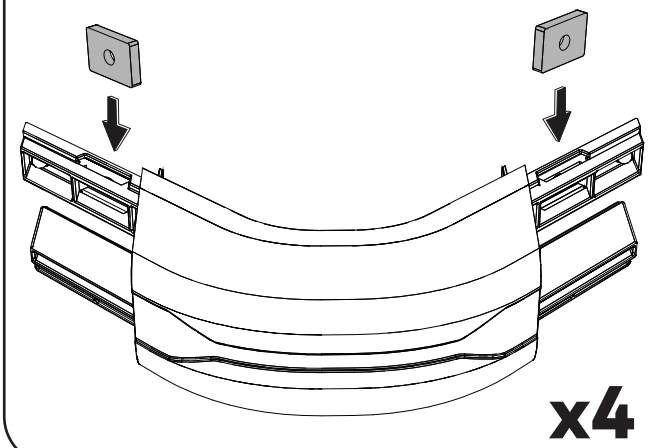

x4

2 FLIP SIDES & ENDS UPSIDE DOWN.

Clear a work area that will be large enough for the platform when fully assembled.

Place platform ends and sides upside down in this work space (use logos as reference).



TIP - To prevent scratching, place a blanket (or the platform's carton, flattened out) over the work area.

3a ASSEMBLE PLATFORM ENDS.

Insert platform corners into plaform ends. Push firmly until fully inserted.

x2

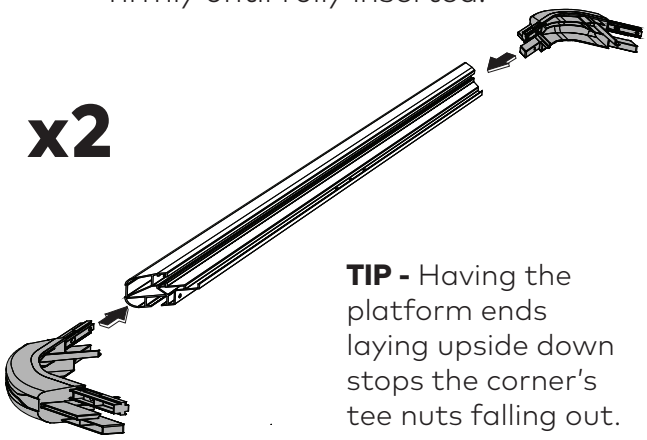

TIP - Having the platform ends laying upside down stops the corner's tee nuts falling out.

3b ASSEMBLE PLATFORM ENDS AND SIDES.

Take one of the platform end assemblies created in step 3a, and fit the platform sides to the corners. Push firmly until fully inserted.

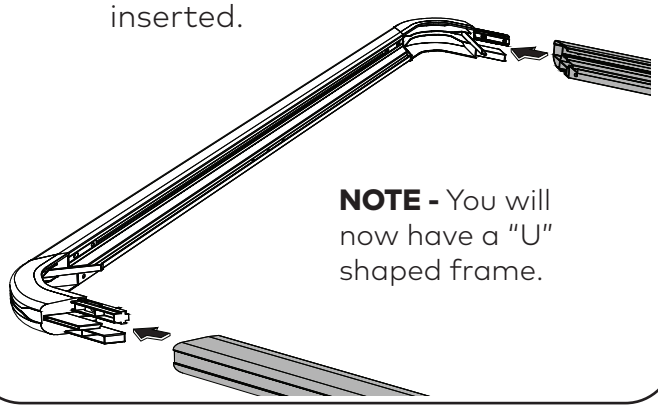

NOTE - You will now have a "U" shaped frame.

3c COMPLETE PLATFORM PERIMETER.

Connect remaining end assembly to the sides as shown below - this completes the four sides of the platform's perimeter.

Leave platform perimeter **upside down** for steps 4-6.

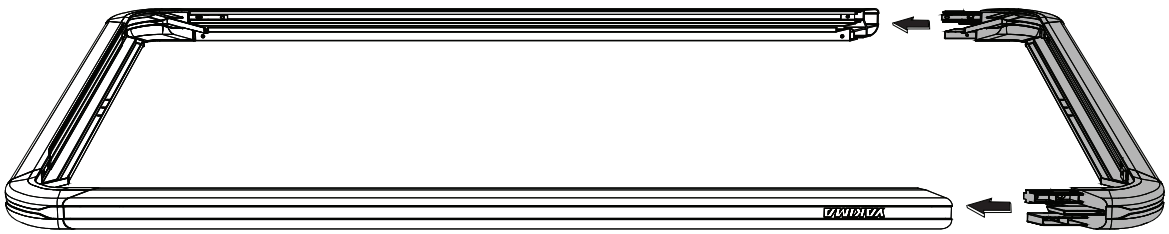

4 INSTALL CORNER BRACES.

Secure corner braces to all four corner pieces using x2 M6 x 25 mm button head cap screw with washer and x2 M6 x 20 mm plastite cap screw as shown. Tighten all screws to 4 Nm with a 4 mm allen key or a suitable torque wrench.

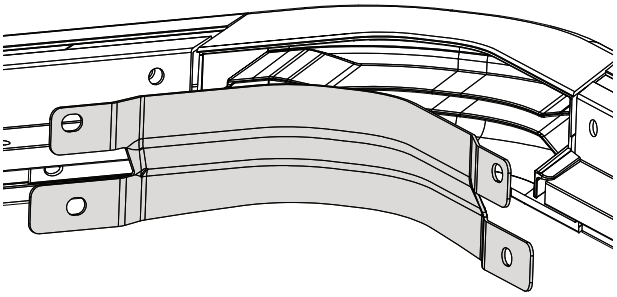

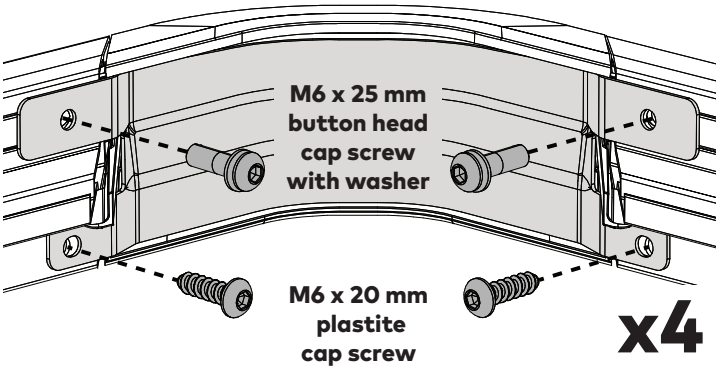

5 INSTALL SLATS.

Flip Slats over.



One-by-one, slide slats into position underneath the perimeter's inside lip. line up rivnuts on each end of the slat with the holes in the platform sides.

Repeat until all slats are in place.

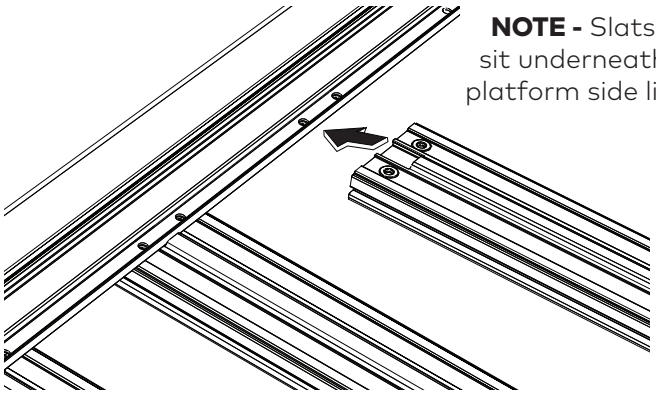

NOTE - Slats sit underneath platform side lip.

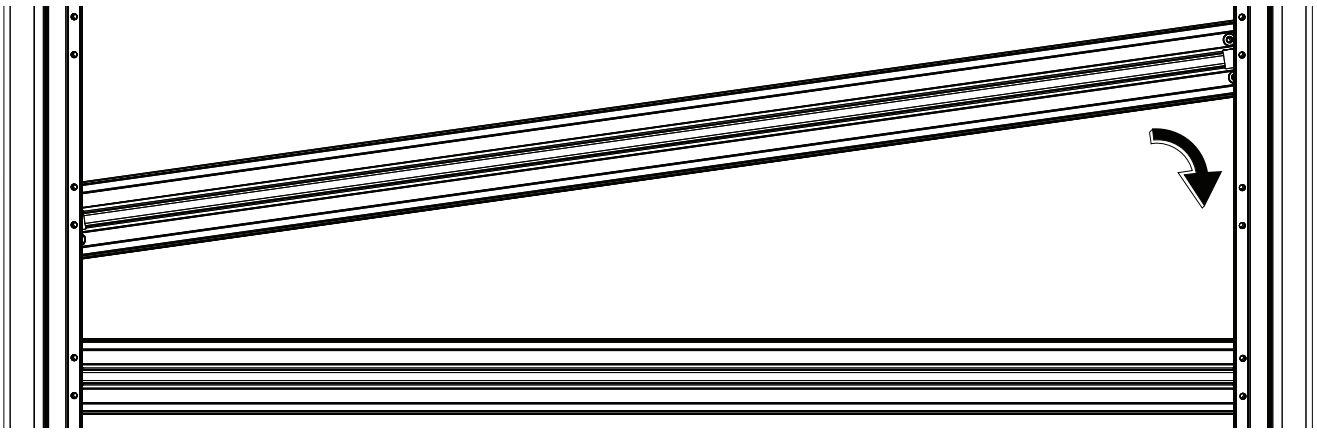

6 SECURE SLATS.

Starting from the middle slat and working outwards, secure each Slat end using x2 M6 x 16 mm button head cap screw with washer as shown.

Tighten all screws to 4 Nm with a 4 mm allen key or a suitable torque wrench.

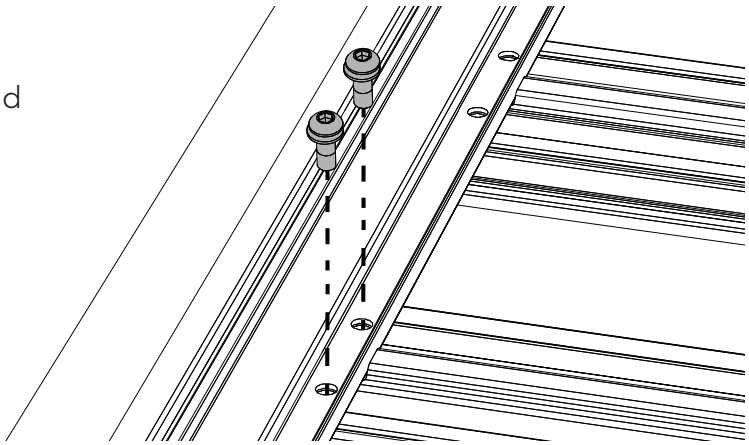

7 POSITION PLATFORM SUPPORTS.

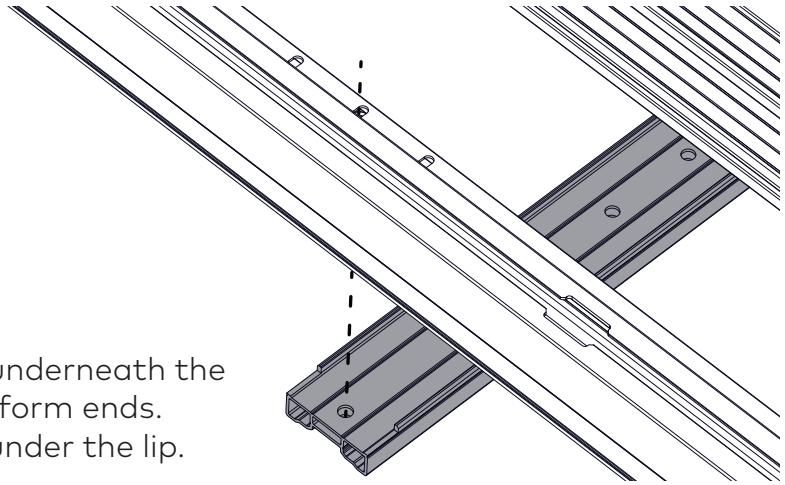

Carefully flip platform over so it faces right way up.



Position the platform supports underneath the centre of the front and rear platform ends. the flat end of the support sits under the lip.

The platform supports ideally should be fixed using the centre of the three holes. However, these can be offset left or right depending on the vehicle's roof or usage requirements. For instance, to prevent interference with an antenna in the centre of a vehicle roof (e.g. Nissan Navara NP300, Ford Ranger).

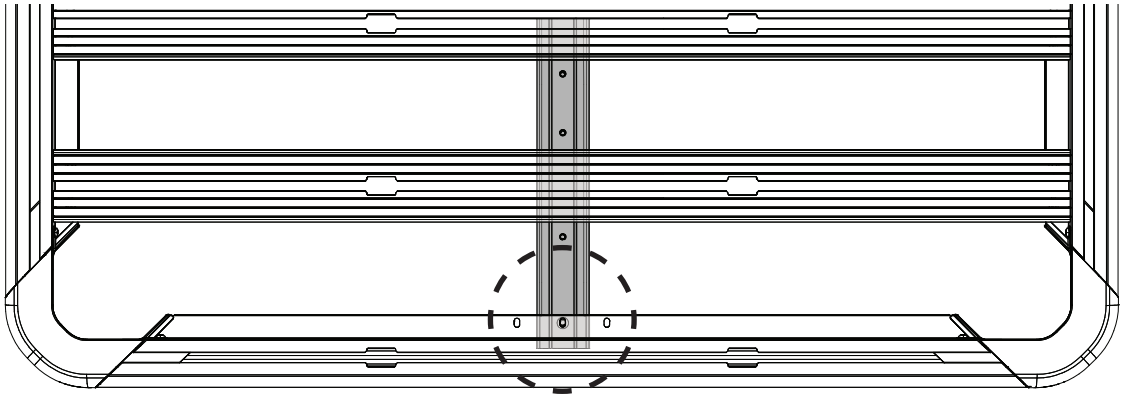

x2

8 SECURE PLATFORM SUPPORTS.

Position a slat clamp on each side of the slat that the support passes under as shown.

Secure platform support to platform end using one M6 x 25 mm button head cap screw with washer through the middle platform end hole.

Secure platform support to slats using one M8 x 25 mm square t-bolt underneath, one M8 washer and M8 nyloc nut on top of each slat clamp as shown.

Tighten M6 button head cap screw to 4 Nm and all M8 nuts to 7 Nm with a torque wrench or 13 mm spanner. repeat for other end.

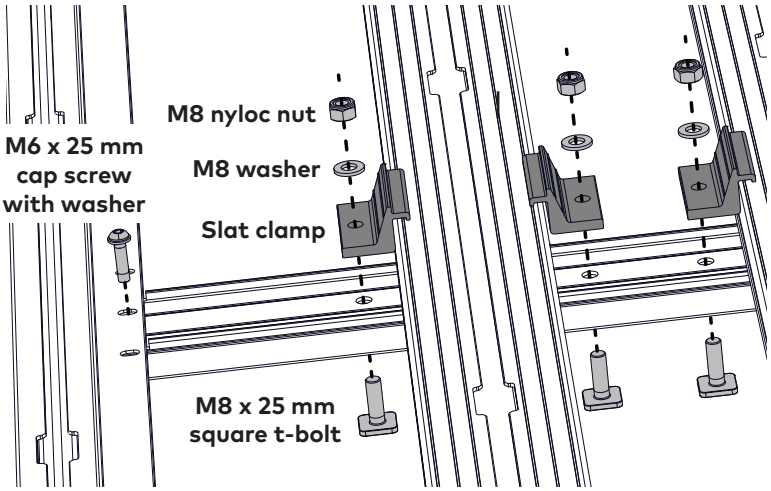

All platforms excluding platform F.

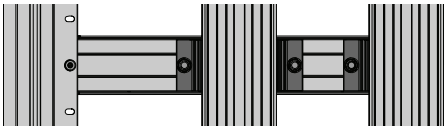

x2

Platform F only.

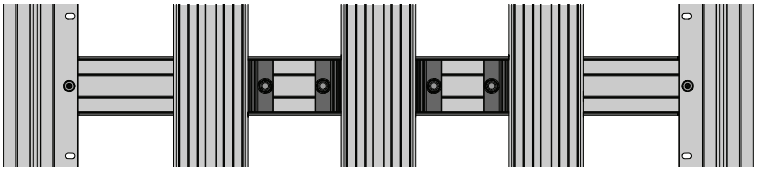

9 PLATFORM ASSEMBLY COMPLETE.

Check that platform has been assembled correctly as per the installation instructions.

NOTE - 7 slat platform shown - indicative of sizes A and B.

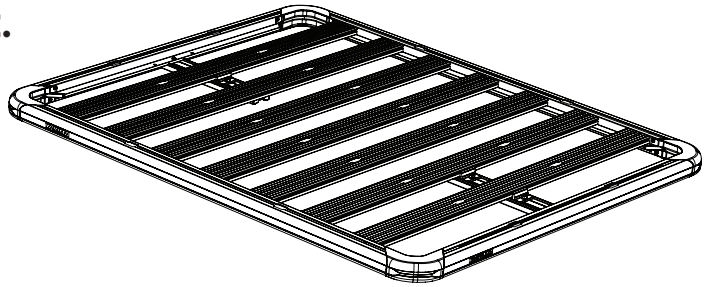

10 INSTALL WIND DEFLECTOR.

Install wind deflector into front of platform. This is done by pressing one end of the deflector into the slot and working across the length of the deflector.

Installation should be confirmed by hearing an audible 'CLICK' when the deflector is fully installed.

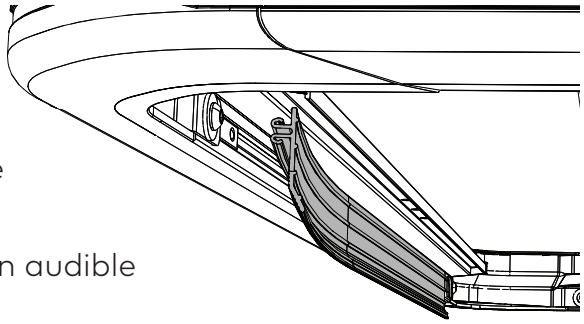

PLEASE REFER (i) TO THE SPECIAL NOTE AT TOP OF PAGE 8, AND; (ii) TO THE RELEVANT PAGE NUMBERS AND STEPS INDICATED IN THE TABLE BELOW:

NAME	IMAGE	LEG PACK PART NUMBERS	PAGE	STEPS
Fixed & Track Mount Mk1	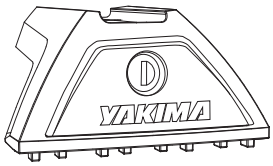	8000142 / 8000143 / 8000144	11	Special Note + 1 to 3
Flush Rail	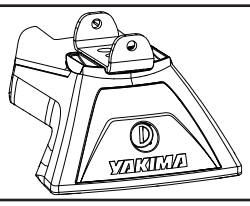	8002001 / 9831005 / 9812119	9	Special Note + 1 to 3
Gutter Mount		8000350 / 8000351 / 8000352	11	Special Note + 1 to 3
SkyLine, TrackTower or TimberLine with StreamLine Adapter	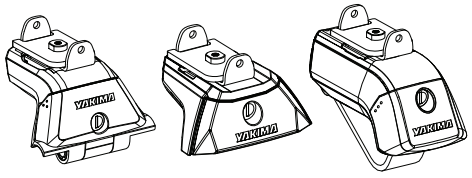	9813024, 8000199 OR 9813064 WITH 8005042 ADAPTER	10	Special Note + Page 10
RuggedLine		VARIOUS	13 + 14	Special Note + 1 to 4

SPECIAL NOTE - ALL PLATFORMS EXCLUDING PLATFORM F.

Your pivot mounts have two sets of mounting holes. Where possible, use the centre holes for mounting.

If extra clearance is needed due to platform-to-roof fitment needs, the offset holes can be used.

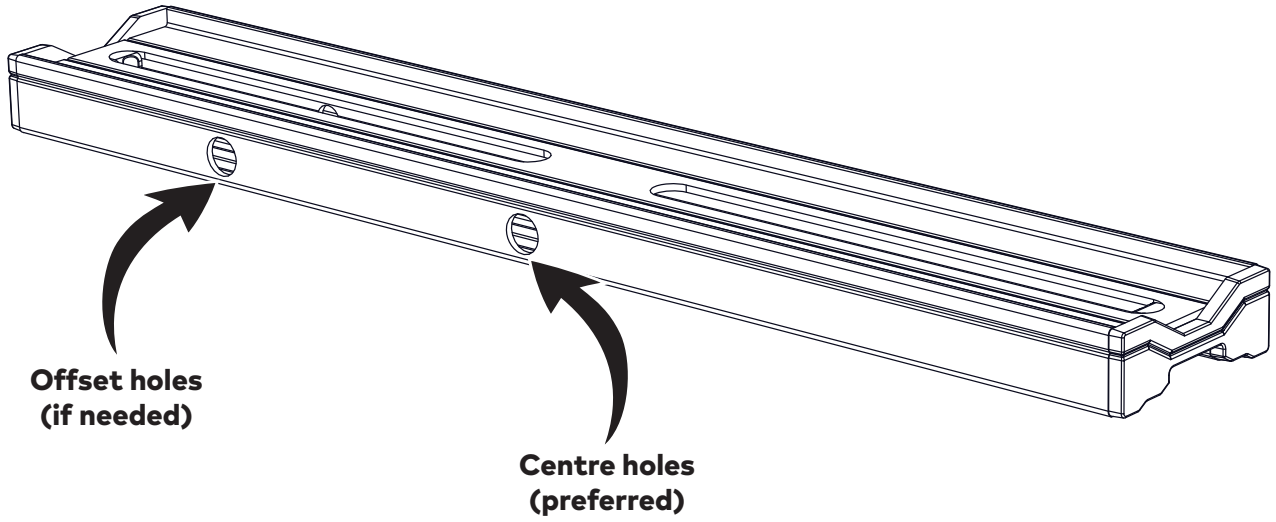

SPECIAL NOTE - PLATFORM F.

Your pivot mounts have two sets of mounting holes at either end of the mount for leg attachments.

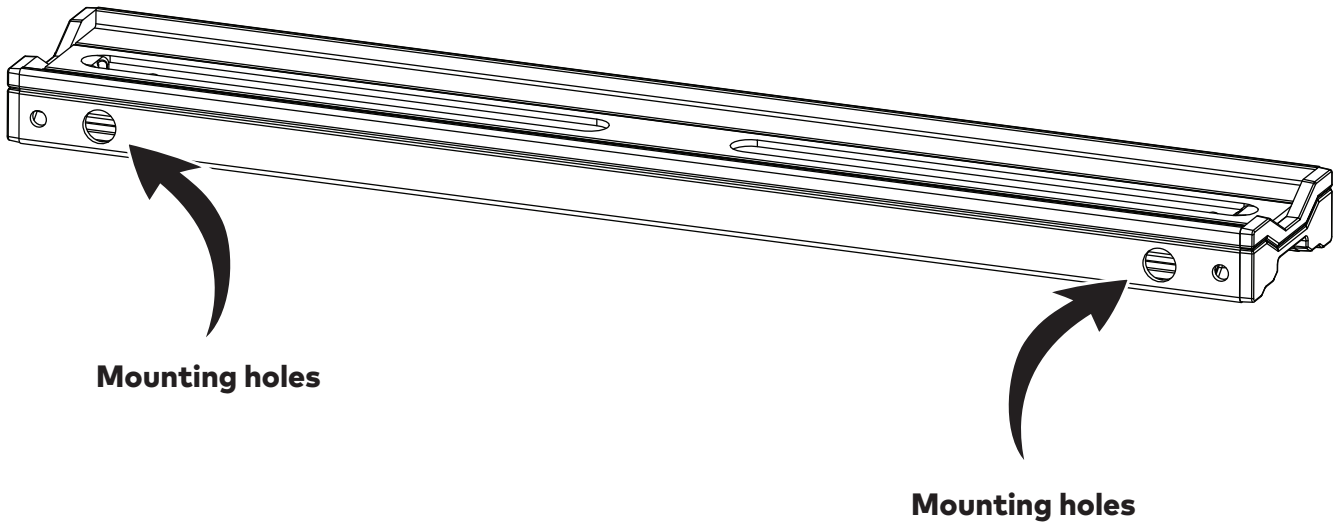

LEG MOUNTING INSTRUCTIONS FOR FLUSH RAIL LEGS

1 REMOVE LEG COVERS.

Using the keys supplied in the LockNLoad leg kit (sold separately), remove all leg covers.

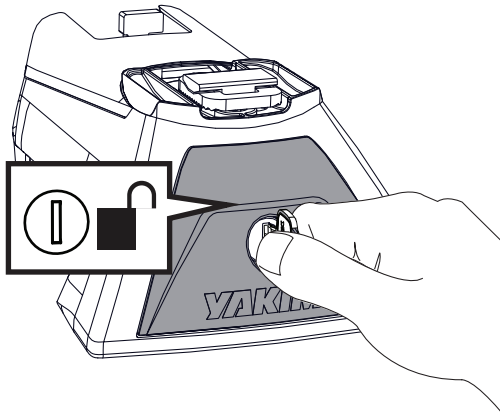

2 DISASSEMBLE LEG ASSEMBLIES.

Disassemble leg components as shown and store in a safe place.

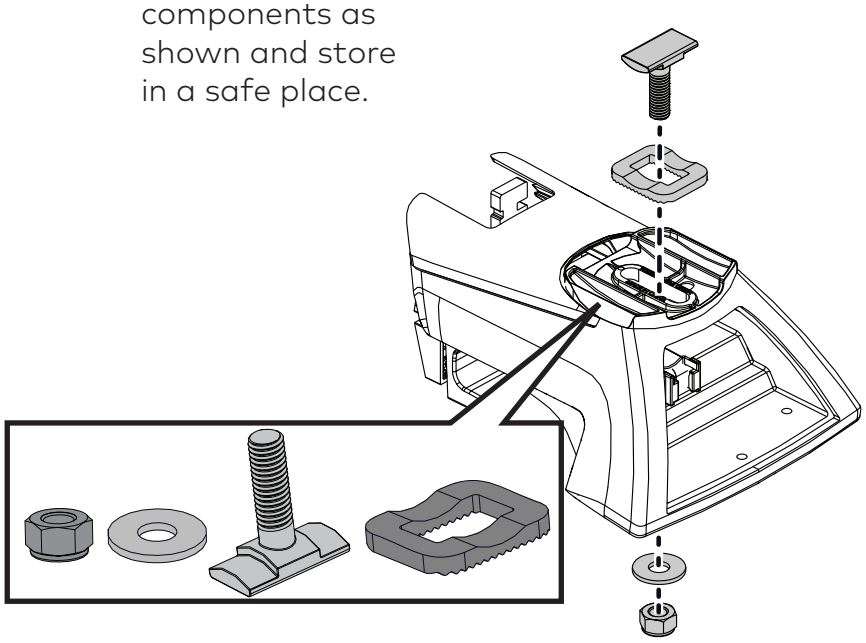

3 ASSEMBLE LEGS.

Assemble each leg as shown using one platform mount bracket, M8 coach bolt, M8 washer and M8 nut from the LockNLoad leg kit.

All brackets should be parallel with the base of the leg prior to tightening.

Tighten all M8 nuts to 9 Nm using a 13 mm spanner.

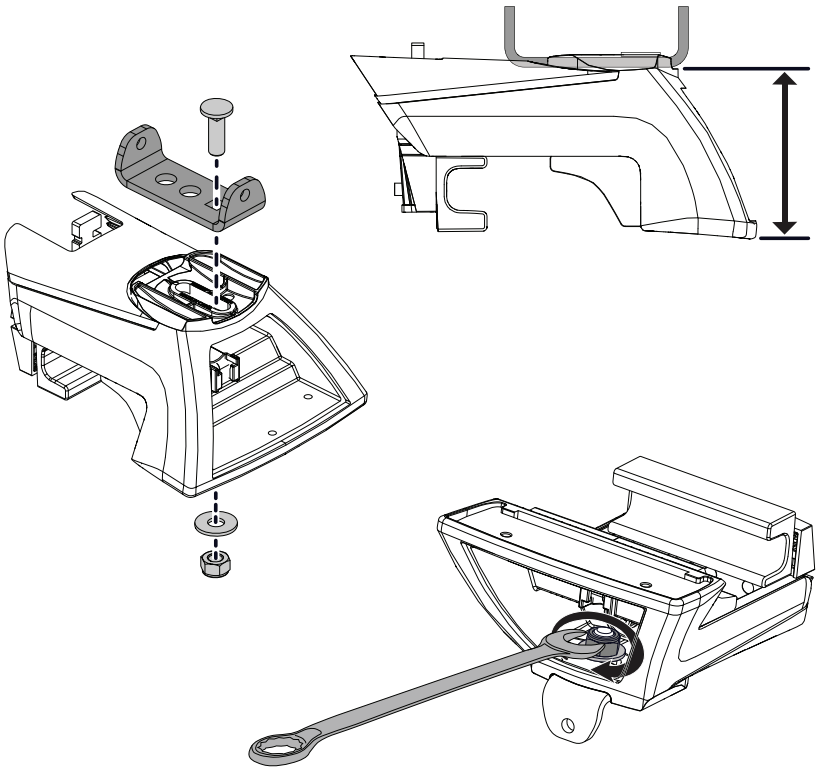

PLEASE PROCEED TO PIVOT MOUNT INSTALL STEP a.

LEG MOUNTING INSTRUCTIONS FOR SKYLINE & TIMBERLINE LEGS WITH STREAMLINE ADAPTER 8005042

NOTE: Follow StreamLine adapter instructions for complete hardware installation procedure.

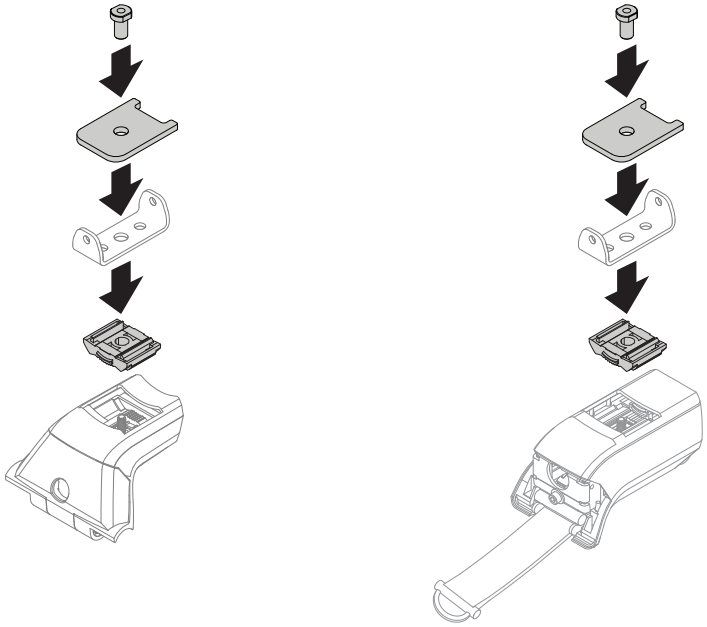

PLEASE PROCEED TO PIVOT MOUNT INSTALL STEP a.

LEG MOUNTING INSTRUCTIONS FOR TRACKTOWER LEGS WITH STREAMLINE ADAPTER 8005042

NOTE: Follow TrackTower instructions for complete hardware installation procedure.

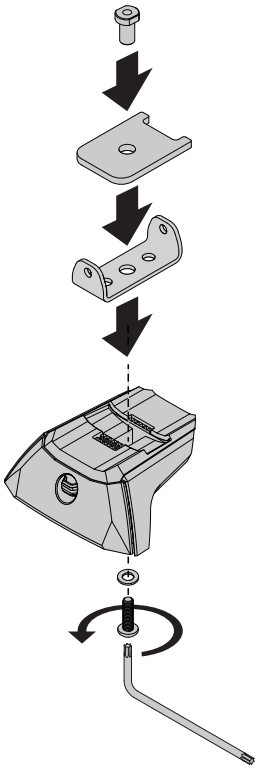

PLEASE PROCEED TO PIVOT MOUNT INSTALL STEP a.

LEG MOUNTING INSTRUCTIONS FOR GUTTER MOUNT & MK1 LEGS

1 ASSEMBLE SCREWS.

From the leg kit, assemble an M8 washer onto each M8 hex screw 16 mm as shown.

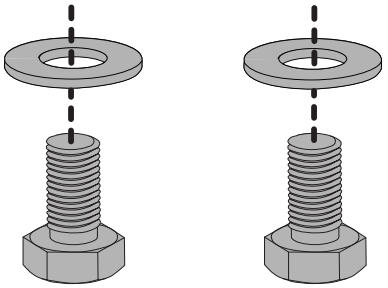

2 INSTALL MOUNTING BRACKETS ONTO LEGS.

Insert nut plate (from leg kit) on top of mounting bracket as shown.

Secure using the two screw and washer assemblies from the previous step.

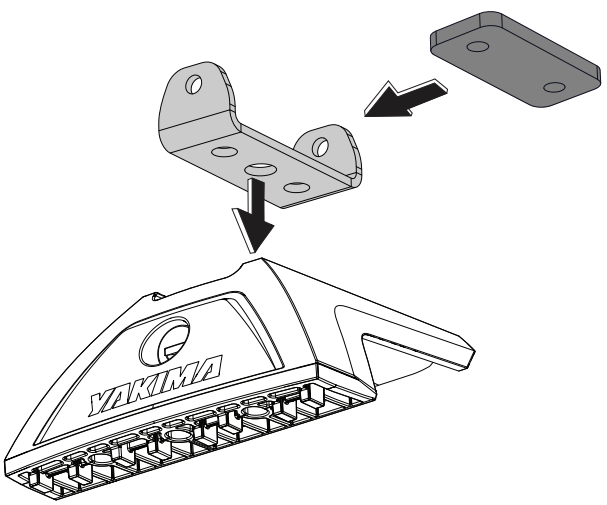

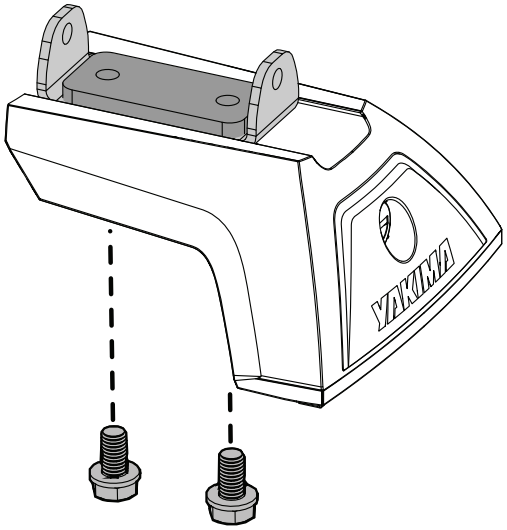

3 TIGHTEN PIVOT MOUNTING BRACKETS TO LEGS.

Tighten all M8 hex screws to 7 Nm using a 13 mm socket wrench or spanner.

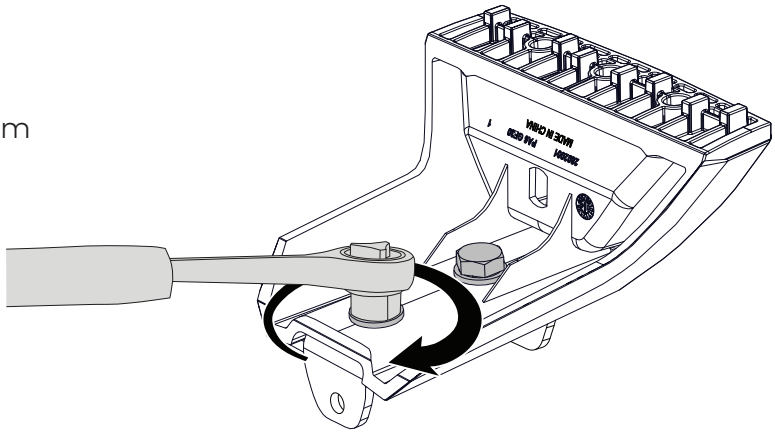

PLEASE PROCEED TO PIVOT MOUNT INSTALL STEP a.

PIVOT MOUNT INSTALL

a INSTALL PIVOT MOUNT TO LEG.

Insert bushes in the desired location on either side of the pivot mount.

Place the pivot mount onto the mount bracket. Secure using the M6 socket head cap screw with a thin M6 washer on the head side and a thick M6 spacer on the nut side.

Tighten all M6 socket head cap screws to 4 Nm with a 5 mm allen key and nuts with a 10 mm spanner or suitable torque wrench.

PIVOT MOUNT INSTALL - ALL PLATFORMS EXCLUDING PLATFORM F.

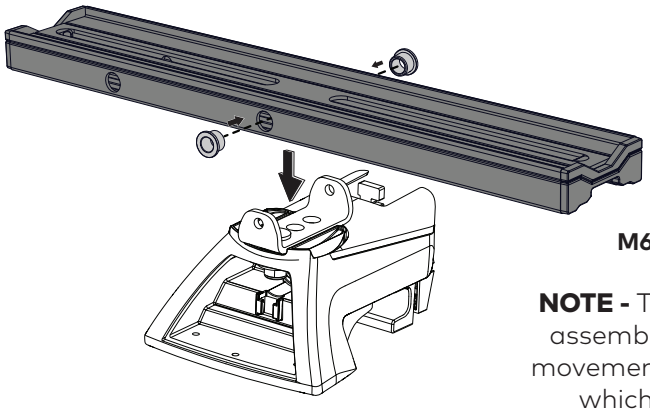

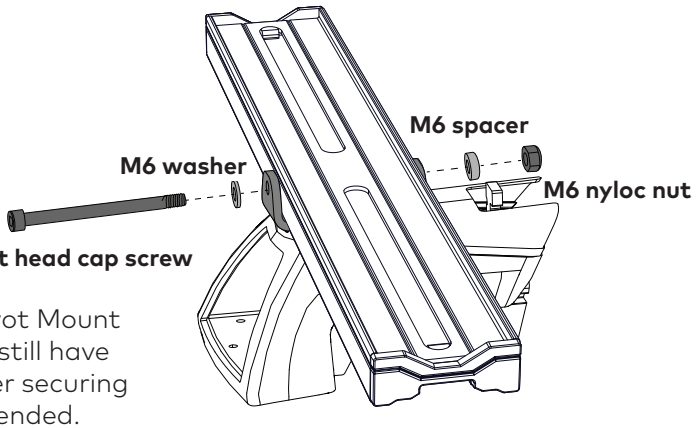

NOTE - The Pivot Mount assembly will still have movement after securing which is intended.

PIVOT MOUNT INSTALL - PLATFORM F.

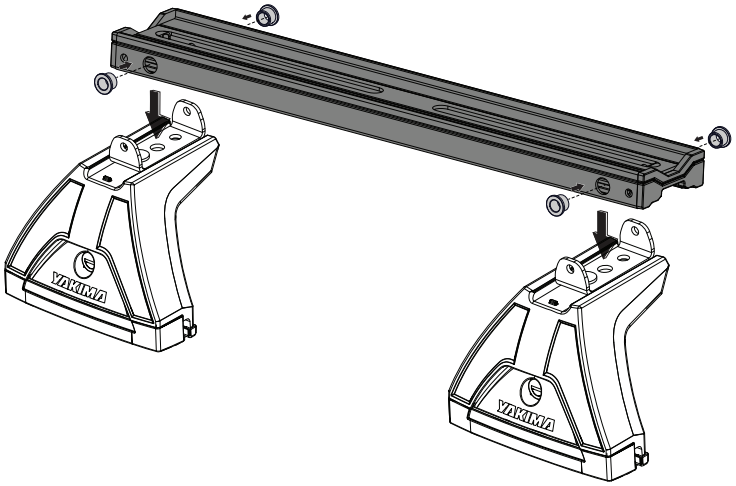

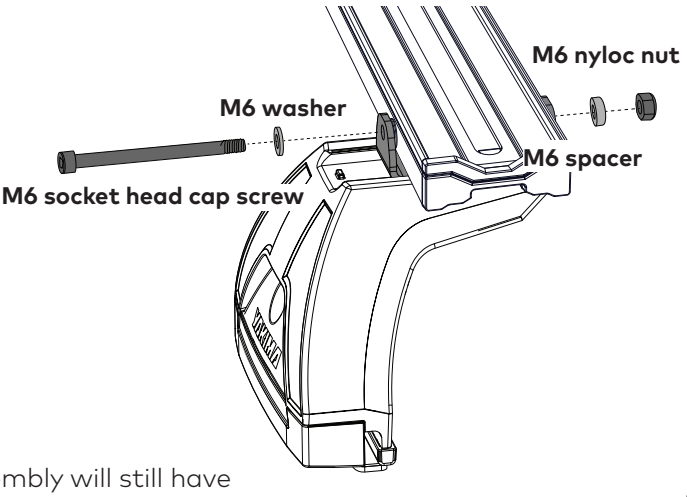

NOTE - The pivot mount assembly will still have movement after securing which is intended.

b MOUNT LEGS TO VEHICLE.

Mount legs to vehicle as per vehicle specific mounting kits (sold separately). Vehicle specific instructions can be viewed and downloaded at our website.

NOTE - Bars are not required to install platform.

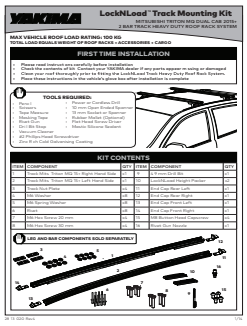
YAKIMA

LockNLoad™ Track Mounting Kit

MITSUBISHI TRITON MQ DUAL CAB 2015+

2 BAR TRACK: HEAVY DUTY ROOF RACK SYSTEM

MAX VEHICLE ROOF LOAD RATING: 100 KG

TOTAL LOAD EQUALS WEIGHT OF ROOF RACKS + ACCESSORIES + CARGO

FIRST TIME INSTALLATION

- Please read instruct ions carefully before installation
- Check the condition of ALL components. Do not use if any parts appear re sating or damaged
- Ensure the correct kit is selected for your vehicle and Track Heavy Duty Roof Rack System.
- Please these instructions in the vehicle's glove box after installation is complete

TOOLS REQUIRED:

- Power or Cordless Drill
- 4.9 mm Drill Bit (Aluminium)
- 13 mm Socket or Spanner
- Rubber Mallet (Optional)
- Measuring Tape
- Masking Tape
- Marker Pen
- Metric Silicone Sealant
- Anti-Slip Grease
- Vacuum Cleaner
- Phillips Head Screwdriver
- Zinc Rich Cold Galvanising Coating

KIT CONTENTS

ITEM	COMPONENT	QTY	ITEM	COMPONENT	QTY
1	Track Mtkx, Triton MQ Dc Right Hand Side	x1	10	4.9 mm Drill Bit	x1
2	Track Mtkx, Triton MQ Dc Left Hand Side	x1	11	Lockn&Load Height Factor	x1
3	Track Nut Plate	x6	12	End Cap Rear Left	x1
4	M6 Washer	x8	13	End Cap Rear Right	x1
5	M8 Spring Washer	x8	14	End Cap Front Left	x1
6	Feet	x8	15	End Cap Front Right	x1
7	M8 Hex Screw 20 mm	x6	16	M8 Button Head Capscrew	x6
8	M8 Hex Screw 30 mm	x2	17	Foam Gsr Inserts	x1

LEG AND BAR COMPONENTS SOLD SEPARATELY

PLEASE PROCEED TO PAGE 15 FOR PLATFORM MOUNTING INSTRUCTIONS.

RUGGEDLINE MOUNTING INSTRUCTIONS

1 MOUNT RUGGEDLINE TO VEHICLE.

Mount RuggedLine to vehicle as per vehicle specific instructions. Vehicle specific instructions can be viewed and downloaded at our website.

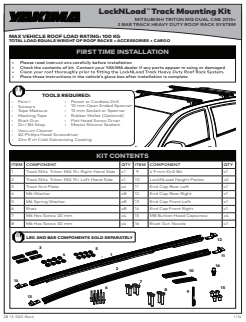

2 PIVOT MOUNT INSTALL.

Insert bushes in the desired location on either side of the pivot mount.

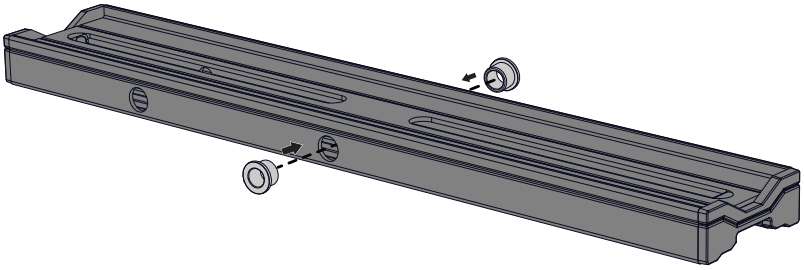

Place a pivot mount on top of each pivot bracket, lining up the bushes on pivot mount with the holes on pivot bracket.

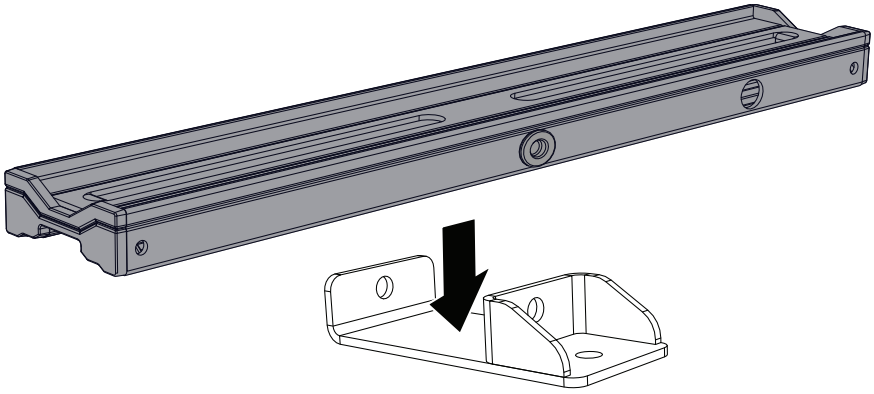

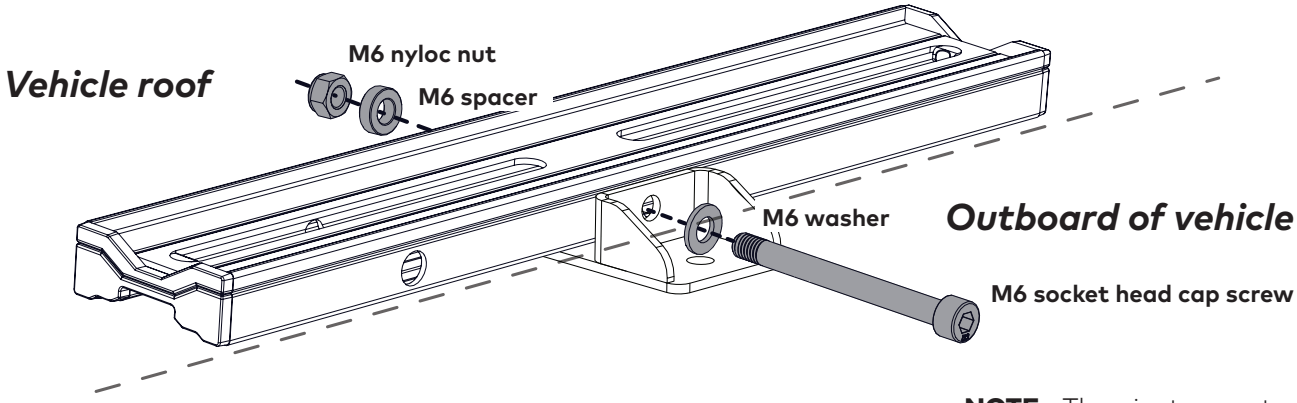

NOTE - The pivot mount assembly will still have movement after securing which is intended.

Secure with the M6 socket head cap screw and M6 washer (outboard of vehicle) and M6 spacer and M6 nyloc nut (inboard of vehicle) from this kit **in the order as shown.**

Tighten all M6 socket head cap screws to 4 Nm with a 5 mm allen key and nuts with a 10 mm spanner or suitable torque wrench.

3 ASSEMBLE PIVOT BRACKET TO RUGGEDLINE.

Assemble the pivot bracket with pivot mount from the previous step along with the M8 hardware (from RuggedLine kit) as pictured. Complete this for all positions on top of the RuggedLine.

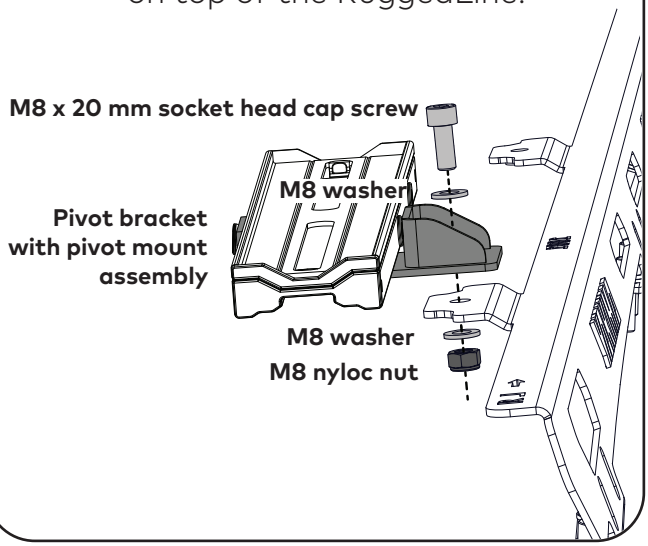

4 SECURE PIVOT BRACKET ASSEMBLIES.

Tighten all M8 socket head cap screws with a 6 mm allen key and all nuts with a 13 mm spanner or a suitable torque wrench.

Ensure all M8 socket head cap screws are tightened to 7 Nm.

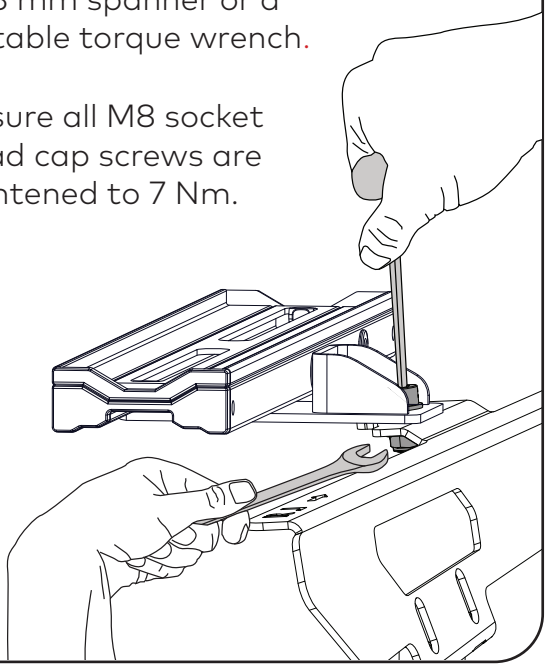

PLEASE PROCEED TO PAGE 15 FOR PLATFORM MOUNTING INSTRUCTIONS.

PLATFORM MOUNTING INSTRUCTIONS
ALL PLATFORMS EXCLUDING PLATFORM F

1 LIFT PLATFORM ONTO VEHICLE.

With the help of an assistant, carefully lift platform up and onto pivot mounts on vehicle roof. Centre platform evenly on legs so there is an equal overhang on sides and ideally on the front and rear.

NOTE - Wind deflector is to be at the front of the vehicle.

NOTE - For hatch vehicles ensure to position the platform so that there is adequate hatch clearance when fully opened.

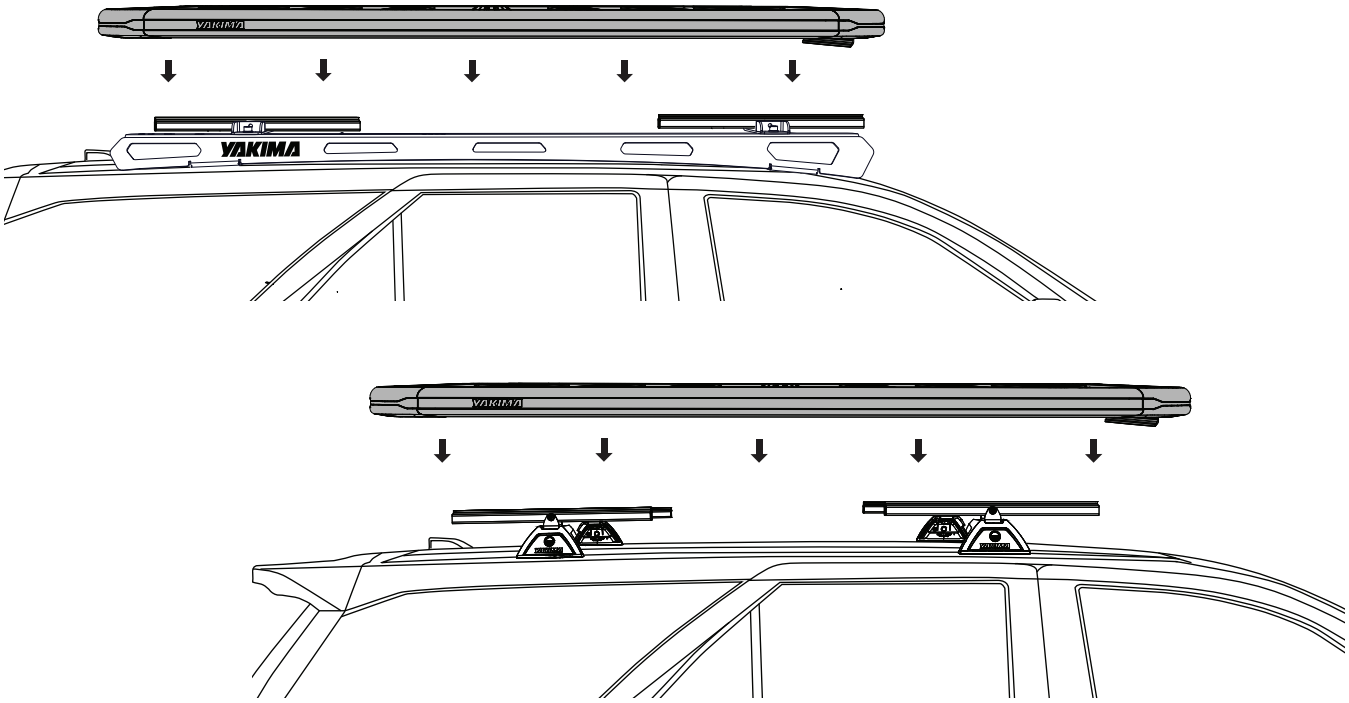

2 MAXIMUM OVERHANG.

The maximum unsupported distance from pivot mount is ONE slat on either end as shown.

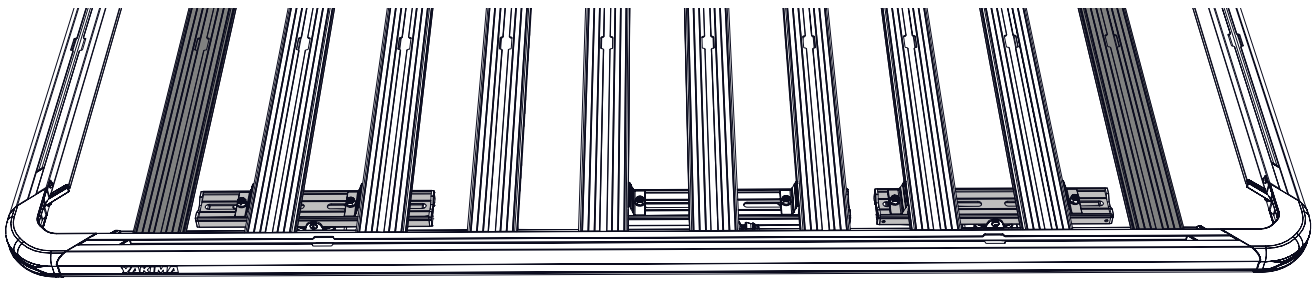

3 ROOF CLEARANCE.

The platform supports ideally should be fixed using the centre of the three holes. However, these can be offset left or right depending on the vehicle's roof or usage requirements. For instance, to prevent interference with an antenna in the center of a vehicle roof (e.g. Nissan Navara NP300, Ford Ranger).

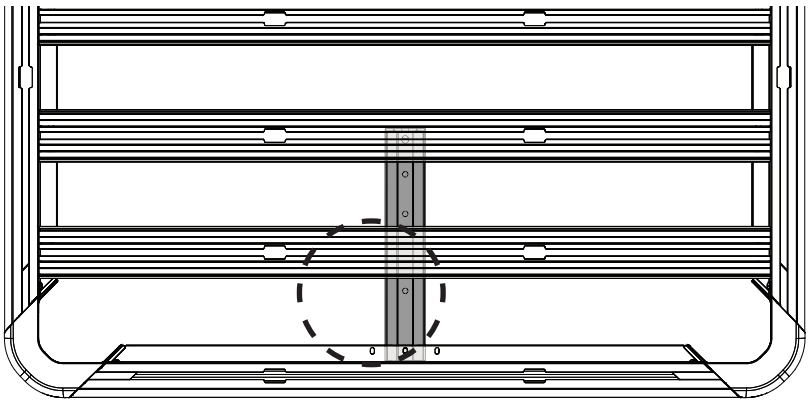

Loosen the three M8 nuts along the centre support and remove the single M6 button head cap screw. Reinstall the M6 button head cap screw in the desired location and retighten all M8 nuts to 7 Nm and the M6 button head cap screw to 4 Nm.

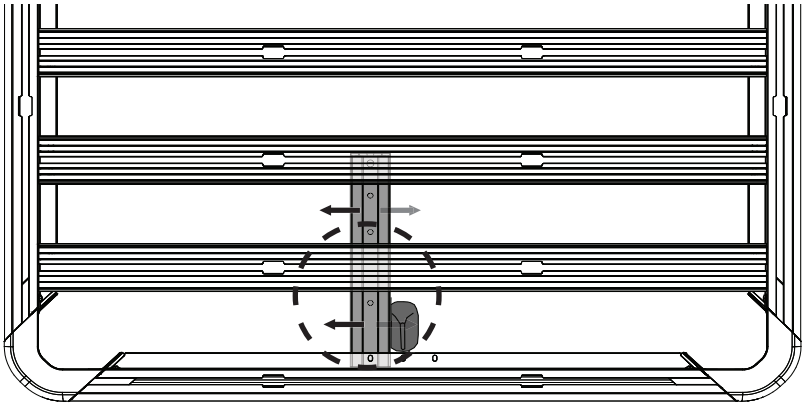

4 INSERT T-BOLTS INTO PIVOT MOUNTS.

Insert one M8 t-bolt into pivot mount channel on either side of each leg. Twist to lock into place. The larger the distance between each pair of M8 t-bolts the better. See images for possible location scenarios:

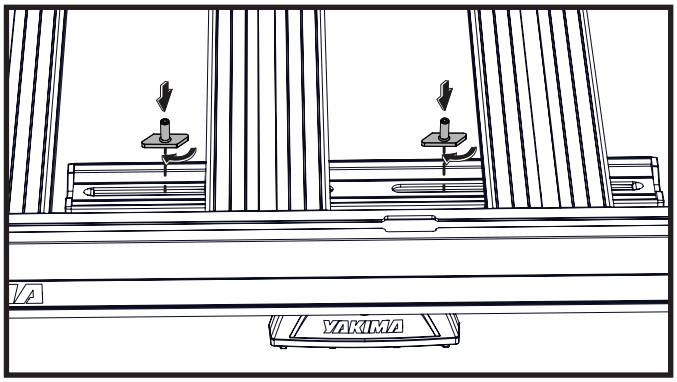

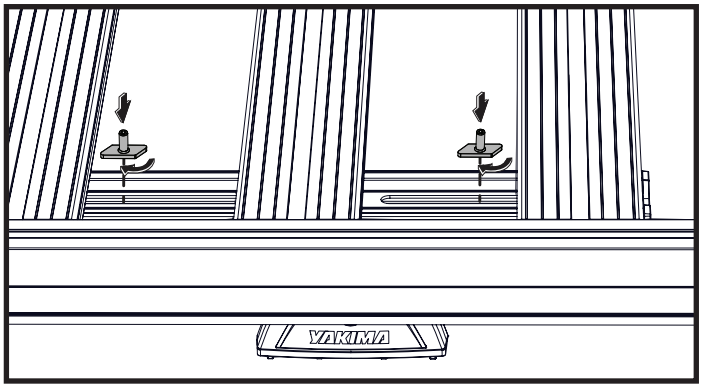

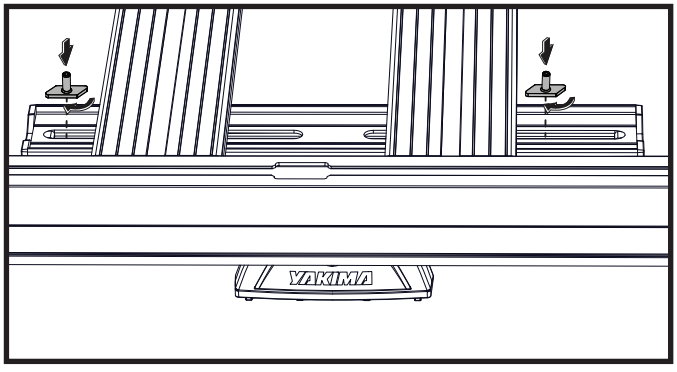

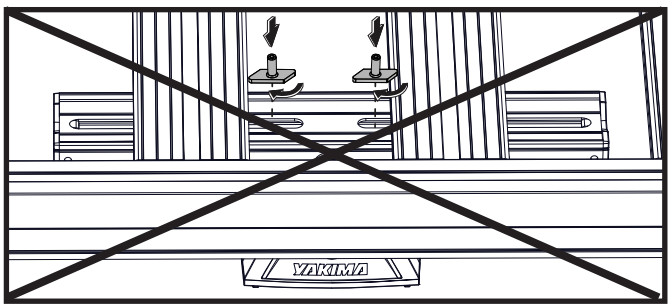

Do not use this configuration

5 SECURE PIVOT MOUNTS TO PLATFORM.

Secure pivot mounts to platform slats using one slat clamp, one M8 washer and one M8 nyloc nut onto each M8 t-bolt as shown.

Tighten all nuts to 7 Nm using a 13 mm socket wrench or spanner.

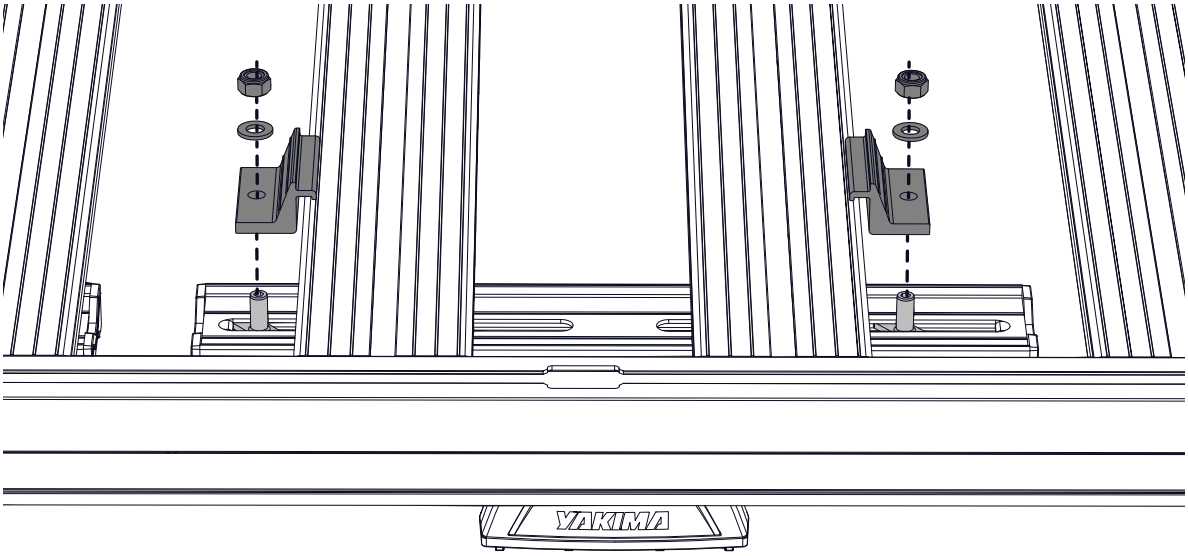

NOTE - Do not to over tighten slat clamps past 7 Nm as this may reduce clamping force.

6 PLATFORM MOUNTING COMPLETE.

Check that platform has been secured correctly as per the mounting instructions.

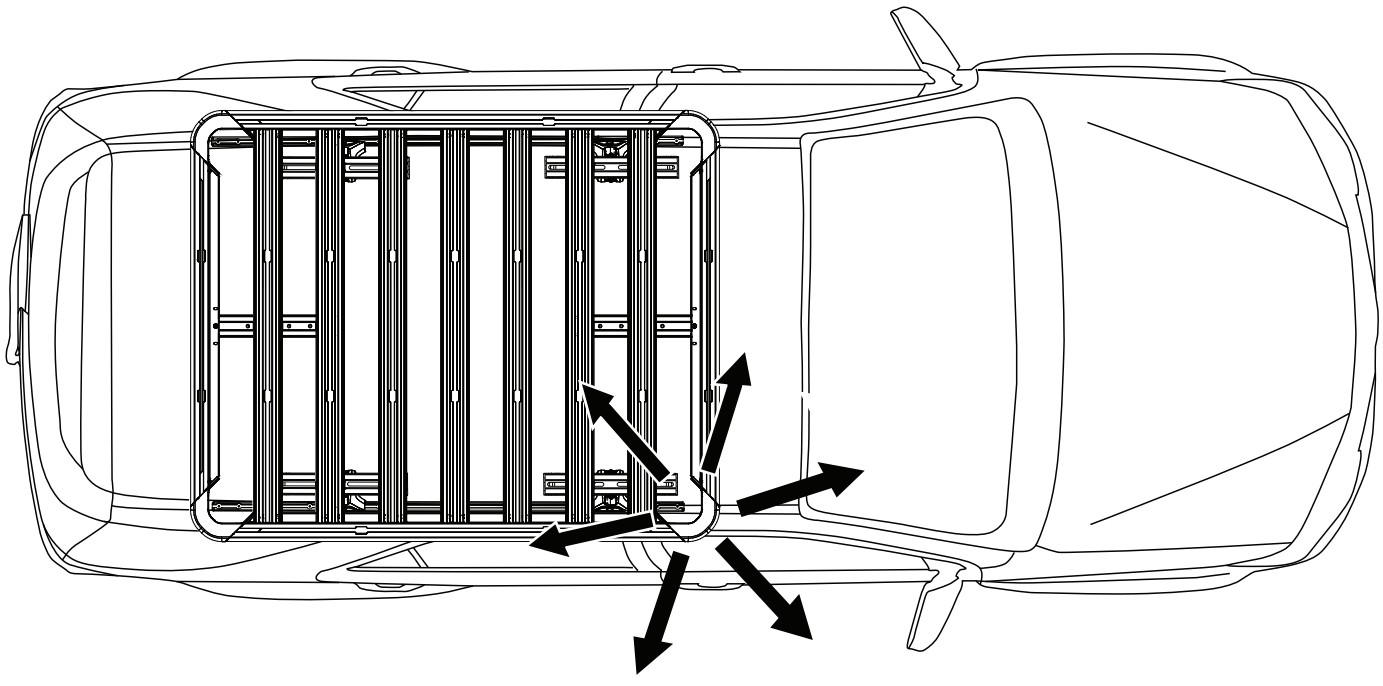

NOTE - 7 slat platform shown - indicative sizes A and B.

PLATFORM MOUNTING INSTRUCTIONS
PLATFORM F

1 LIFT PLATFORM ONTO VEHICLE.

With the help of an assistant, carefully lift the platform up and onto the pivot mounts on vehicle roof. Centre the platform evenly on the legs so there is an equal overhang on sides and ideally on the front and rear.

NOTE - Wind deflector is to be at the front of the vehicle.

NOTE - For hatch vehicles ensure to position the platform so that there is adequate hatch clearance when fully opened.

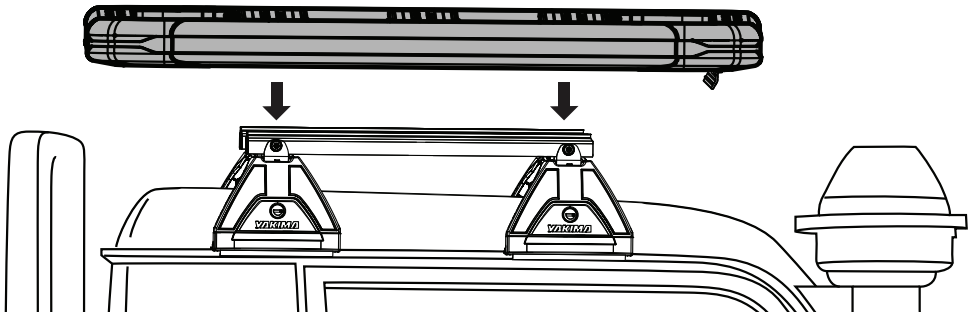

2 INSERT T-BOLTS INTO PIVOT MOUNTS.

Insert one M8 t-bolt into pivot mount channel next to each platform slat side as pictured. Twist to lock into place.

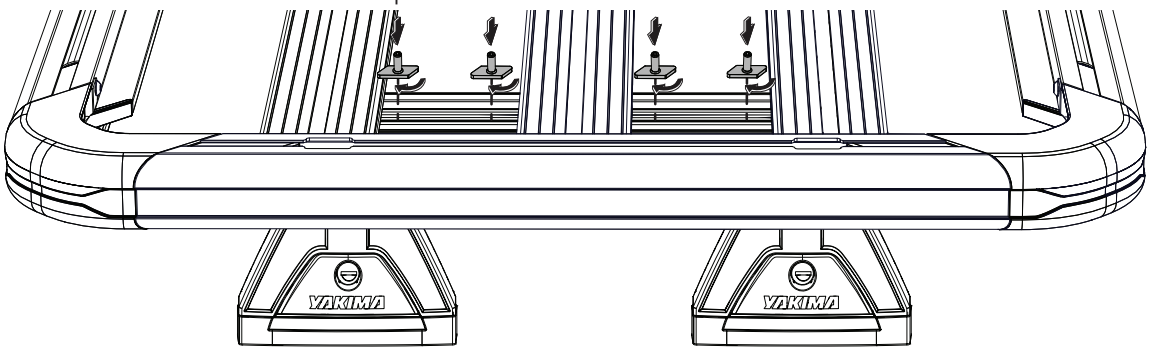

3 SECURE PIVOT MOUNTS TO PLATFORM.

Secure pivot mounts to platform slats using one slat clamp, one M8 washer and one M8 nyloc nut onto each M8 t-bolt as shown.

Tighten all nuts to 7 Nm using a 13 mm socket wrench or spanner.

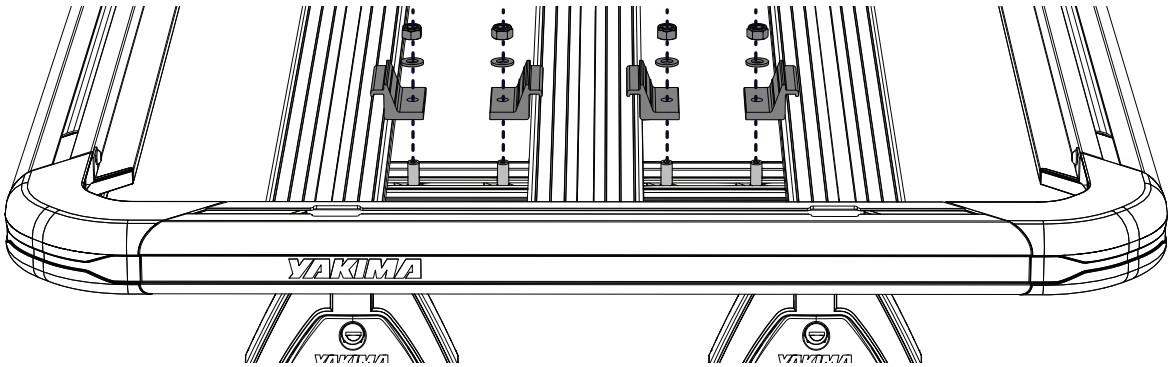

NOTE - Do not to over tighten slat clamps past 7 Nm as this may reduce clamping force.

4 PLATFORM MOUNTING COMPLETE.

Check that platform has been secured correctly as per the mounting instructions.

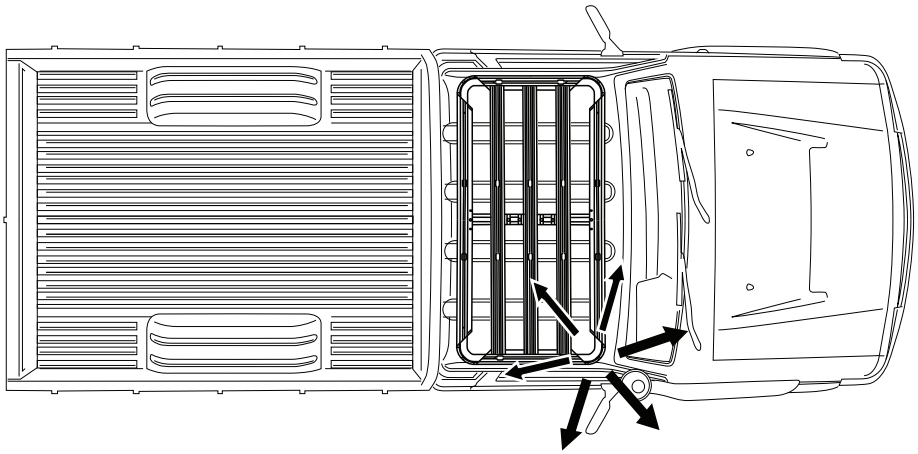

WIND DEFLECTOR REMOVAL

NOTE: The wind deflector can be removed to suit certain anchors/accessories to be used with the front extrusion. This is done by simply peeling the part out of the slot, starting at one end and working across the length of the deflector.

Installation is the reverse and should be confirmed by hearing an audible 'CLICK' when the deflector is fully installed.

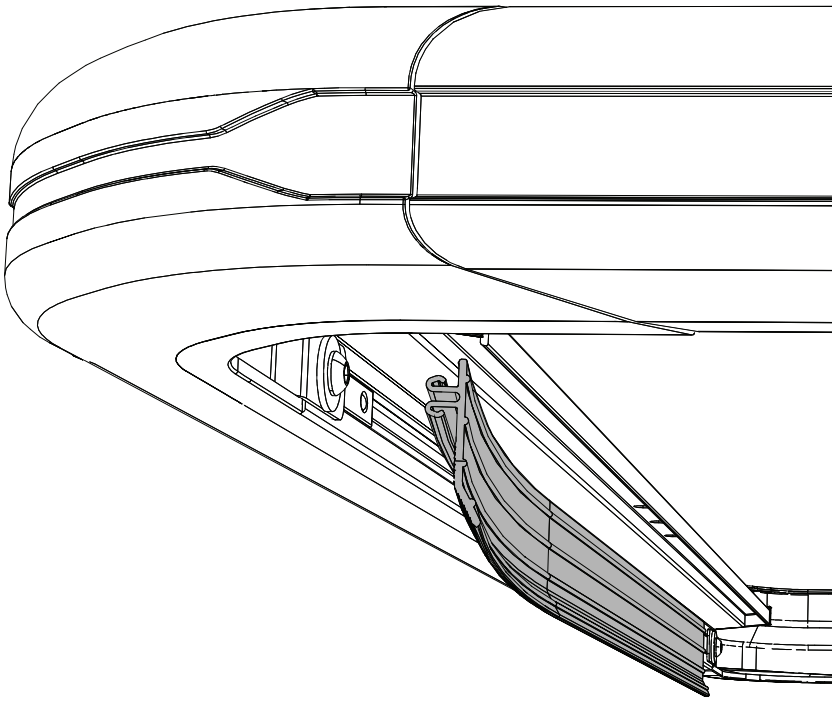

www.yakima.com.au
www.yakima.co.nz
www.yakima.com
www.yakima.eu

YAKIMA AUSTRALIA PTY LTD
17 Hinkler Court
Brendale, QLD 4500
Australia
1800 143 548

YAKIMA PRODUCTS, INC.
4101 Kruse Way
Lake Oswego, OR
97035-2541
USA
888 925 4621

ALL CONTENT SUBJECT TO YAKIMA AUSTRALIA PTY LTD COPYRIGHT © 2017